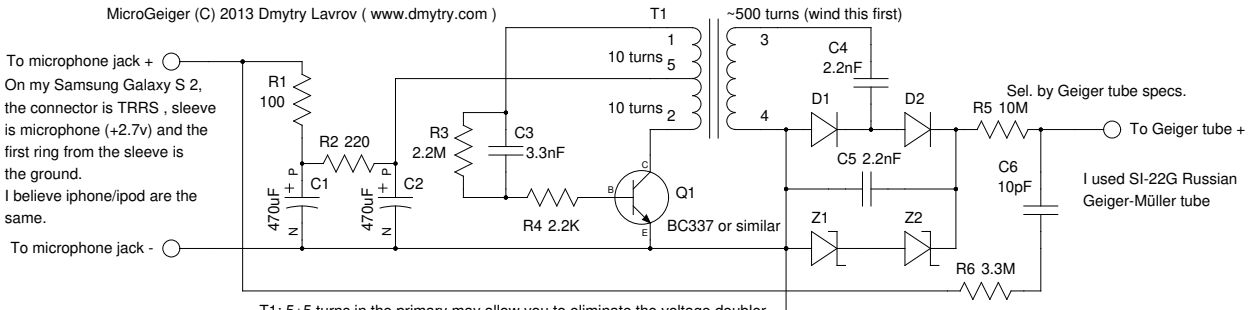

T1: 5+5 turns in the primary may allow you to eliminate the voltage doubler.
C4, C5, C6: ceramic 2000V capacitors (600v is fine). D1, D2: FR107
Z1,Z2: BZX85V200, other 200v zeners will work. Change voltage for different Geiger tubes.

Output voltage measurement: a multimeter will load this circuit too much. I used a 10GOhm resistor in series with the multimeter.
Measure a known voltage source with and without the high value resistor to get the scaling factor.

10 turns

TITLE	
FILE:	REVISION:
PAGE OF	DRAWN BY: